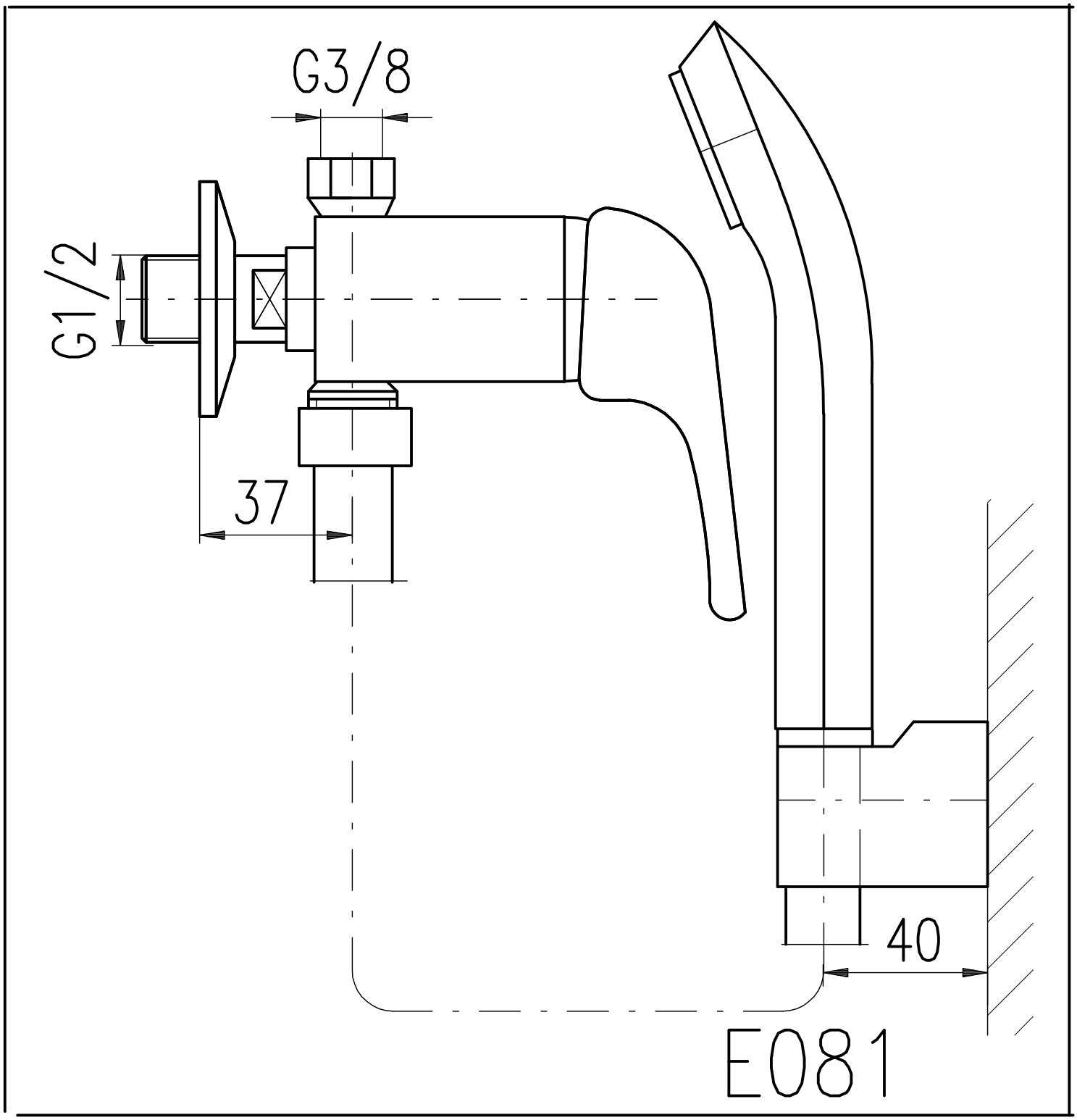
G3/8
G1/2
37
40
E081