DESIGN + ENGINEERING
GROHE GERMANY

99.1084.031/ÄM 241706/02.18

www.grohe.com

Pure Freude an Wasser
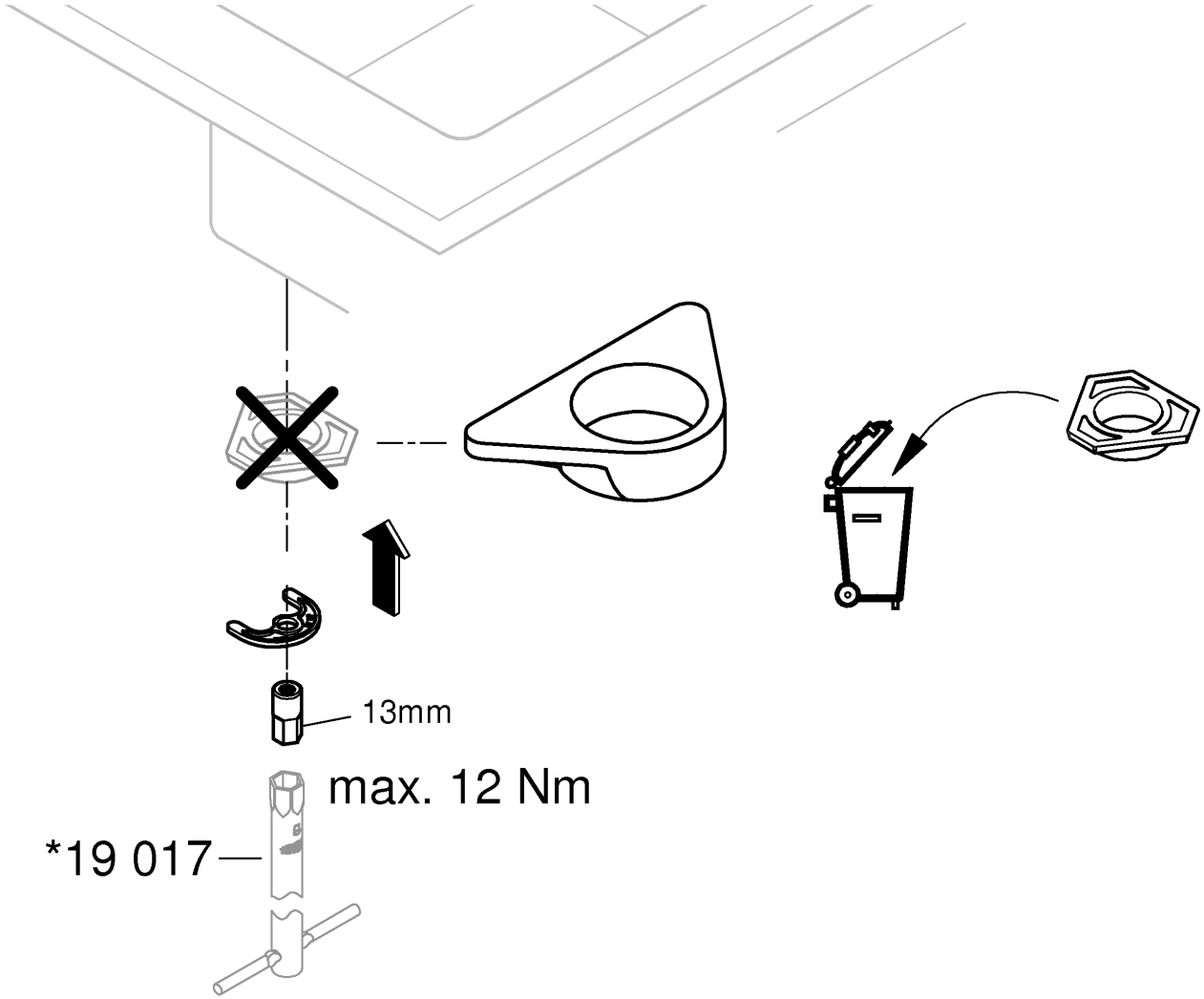
GROHE