DESIGN + ENGINEERING
GROHE GERMANY

99.1323.031/ÄM 244713/07.20

www.grohe.com

Pure Freude an Wasser

GROHE

1

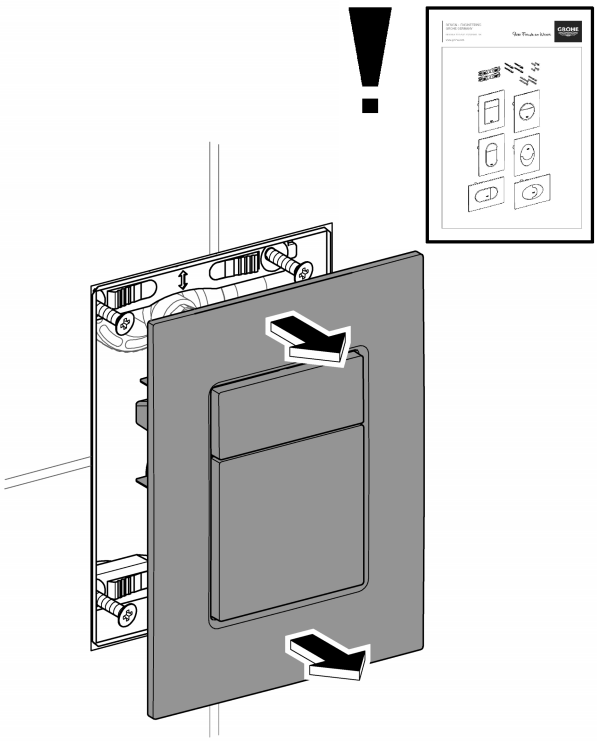

2

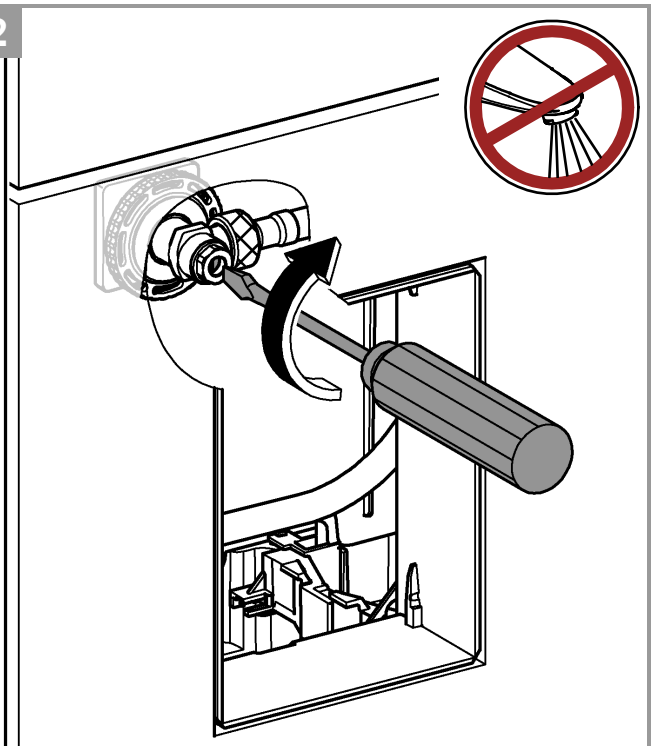
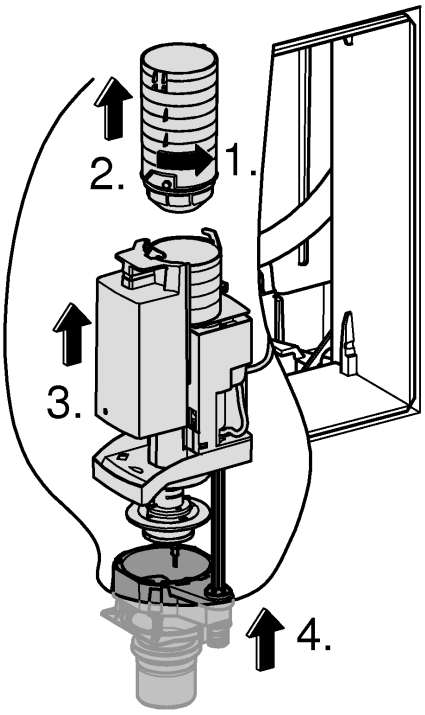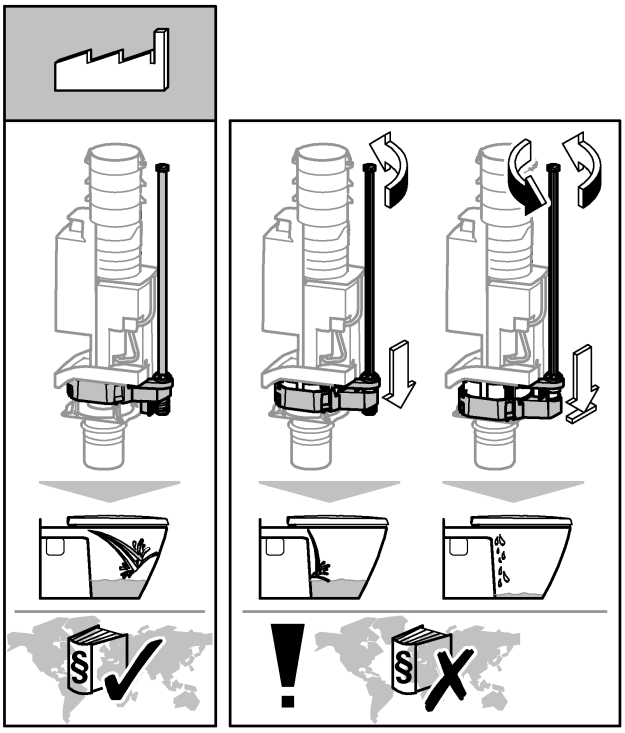
3